MODEL 74
NON-CATALYTIC UNIT

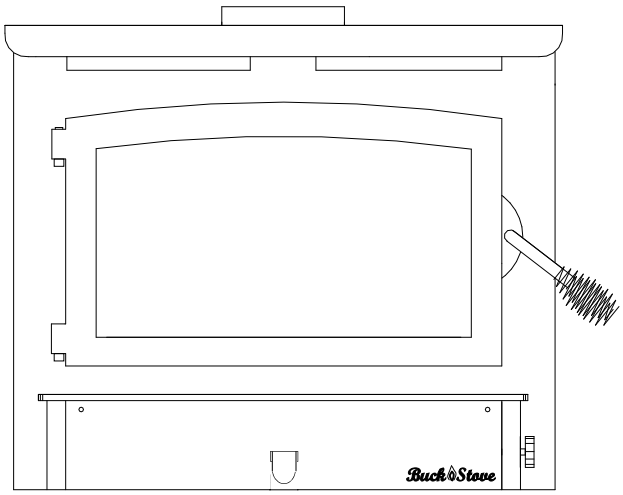

FIREPLACE INSERT & FREESTANDING

FEATURES
PREPARATIONS **INSTALLATION**
OPERATION **MAINTENANCE** **SAFETY**

SAFETY NOTICE ⚠

IF THIS HEATER IS NOT PROPERLY INSTALLED, A HOUSE FIRE MAY RESULT. FOR YOUR SAFETY, FOLLOW THE INSTALLATION INSTRUCTIONS. CONTACT THE AUTHORITY HAVING JURISDICTION (SUCH AS MUNICIPAL BUILDING DEPARTMENT, FIRE DEPARTMENT, FIRE PREVENTION BUREAU, etc.) CONSULT BEFORE INSTALLATION TO DETERMINE THE NEED TO OBTAIN A PERMIT. KEEP THESE INSTRUCTIONS FOR FUTURE USE.

TESTED AND LISTED BY: **ITS/WARNOCK HERSEY, MIDDLETON, WI**

MANUFACTURED BY NEW BUCK CORPORATION
200 ETHAN ALLEN DRIVE
P.O. BOX 69
SPRUCE PINE, N.C. 28777
www.buckstove.com

Revised January 2013

TABLE OF CONTENTS

Important Instructions 2

SECTION I: Introduction 3

Type of wood and loading procedures 3

SECTION II: Masonry Insert Installation 4

Installation Preparation-Fireplace 5

Mounting Trim Panels 7

SECTION III: Pre-Fab Insert Installation 10

SECTION IV: Residential Freestanding Installation 11

Clearances To Combustibles Freestanding Without Close Clearance Shields and Using Single Wall Pipe 19

Residential / Mobile Home Double Wall or Shielded Single Wall Connector With Close Clearance Shields 20

Residential / Mobile Home Double Wall or Shielded Single Wall Connector Without Close Clearance Shields 21

Installation of Close Clearance Shields (Optional) 22

Alcove Installation Double or Shielded Single Wall Connector With Close Clearance Shields 23

SECTION V: Freestanding Mobile Home Installation 24

SECTION VI: Wood Heater Safety 30

SECTION VII: Operation 31

SECTION VIII: Troubleshooting 32

Warranty 34

INSTALLATION, OPERATION, AND MAINTENANCE INSTRUCTIONS MODEL 74

BEFORE INSTALLING YOUR NEW BUCK STOVE,
READ THE ENTIRE INSTRUCTION MANUAL

IMPORTANT INSTRUCTIONS

WARNING

THESE UNITS GENERATE A LOT OF HEAT, SO TREAT THEM WITH CARE. **HOT WHILE IN OPERATION!** KEEP CHILDREN, CLOTHING AND FURNITURE AWAY. CONTACT MAY CAUSE SKIN BURNS. "DO NOT USE CHEMICALS OR FLUIDS TO START THE FIRE." "DO NOT BURN GARBAGE OR FLAMMABLE FLUIDS." "DO NOT CONNECT TO ANY DISTRIBUTION DUCT OR SYSTEM". "READ ALL INSTRUCTIONS BEFORE INSTALLING AND USING THE APPLIANCE. FAILURE TO FOLLOW INSTRUCTIONS MAY RESULT IN PROPERTY DAMAGE, BODILY INJURY OR EVEN DEATH. SAVE THESE INSTRUCTIONS FOR FUTURE REFERENCES.

- The New Buck Corp. non-catalytic Model 74 has been tested by ITS, Warnock Hersey to ANSI/UL Standards 1482 :UL 1482 (2000) :UL 1482 (2006) :UL 1482 (2010)
- Install and operate your unit according to instructions provided in this manual. Local building codes may apply; therefore, contact your local building inspector or fire marshal for necessary installation requirements and permits which may go beyond these instructions. Contact your insurance company for coverage and installation inspection.
- **If MODEL 74 is installed in a mobile home:**
  "DO NOT INSTALL IN SLEEPING ROOMS."

õ **NOTE: When burning any unit or appliance that combusts fuel for heat, such as coal, oil, wood or natural and (L.P.) liquid petroleum gas. We highly recommend the use of smoke and carbon monoxide detectors in your home.**

- The Model 74 is approved for use in specified Zero Clearance fireplaces (ZCF's).
- Examine masonry fireplace and chimney prior to installation of fireplace accessory to determine that construction meets minimum fireplace construction requirements illustrated in instructions, that it is free from cracks, loose mortar, creosote deposits and other blockage or other signs of deterioration.

CAUTION

DO NOT USE MORE THAN ONE STOVE TO A CHIMNEY. DO NOT USE A FLUE INTENDED FOR A GAS APPLIANCE.

CAUTION
YOUR CHIMNEY MUST BE CORRECTLY SIZED. A CHIMNEY THAT IS TOO SMALL OR LARGE IN DIAMETER OR TOO SHORT, CAN CAUSE YOUR STOVE TO SPILL SMOKE WHEN DOOR IS OPENED.

SECTION I

INTRODUCTION

Your new MODEL 74 is a non-catalytic unit designed to meet the most stringent emissions standards without use of a catalytic combustor. This effect is achieved through use of secondary air which is mixed with primary air in unit's firebox.

For peak performance, we suggest use of natural seasoned hard wood, loading wood length way from front to rear.

NOTE: Soft woods such as pine, create more creosote, clogging of chimney and produce a less efficient burn performance.

You should not burn trash or garbage, artificial or paper logs, gift wrapping, treated or painted wood or any type of coal or flammable fluids.

The primary air, which is controlled by user, burns wood. Secondary air is admitted into firebox through secondary air tubes at top of firebox. This secondary air burns impurities in smoke released from initial wood burning. The temperature necessary for this combustion is maintained through firebrick refractory. If any more technical information is necessary, contact your local dealer.

Under specific test conditions this heater has been shown to deliver heat at rates ranging from approximately 11,800 to 40,900 BTU/HR.

This unit may also be used with optional room air blower. To order optional motor assembly you must specify stove model number and give following part number:

*Model 74: Motor Assembly—MA 5126715

For operation and use of this electrical assembly, see instructions provided with motor assembly kit.

SECTION II

MASONRY INSERT INSTALLATION

The Model 74 may be installed using an all masonry fireplace built in accordance with Uniform Building Code and National Fire Protection Association (NFPA). The first step in this type of installation is to determine acceptability of fireplace and chimney for use with a woodstove. Both construction and condition of fireplace are important considerations when installing a woodstove. The chimney should extend at least 3' above roof and at least 2' above any point of roof within 10'.

CAUTION

REMEMBER TO HAVE YOUR CHIMNEY INSPECTED FOR LEAKS AND BLOCKAGE BEFORE YOU INSTALL YOUR STOVE. “DO NOT CONNECT THIS UNIT TO A CHIMNEY FLUE SERVING ANOTHER APPLIANCE.”

MINIMUM CLEARANCE MASONRY INSERT

MODEL 74

A. Side Wall Combustible	16"
B. Front Floor Protector	20"
C. Side Floor Protector	8"
D. Side Wood Trim	10"
E. Top Wood Trim	10"
F. Mantel or Brackets	24"

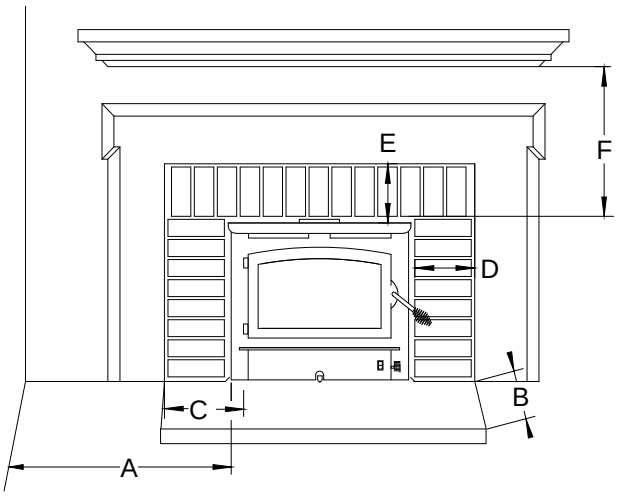

1. The hearth must be of masonry construction and must extend a minimum of 20" in front of firebox opening and a minimum of 8" to either side of firebox opening.
2. If there is not minimum hearth protection from front of firebox opening and front of masonry hearth, a floor protector must be used in front of hearth to protect combustible materials. The floor protector must be 3/8" minimum thickness noncombustible material or equivalent.(See Page 12,13).

POSSIBLE TOOLS NEEDED FOR INSTALLATION

If you decide to install your own stove, there are several hand tools you may need to do the job. If you do not already have them, they are readily available at most hardware stores.

Caulking gun
Large adjustable wrench (may not be needed)
Drop cloths or newspapers
Vacuum cleaner or whisk broom
Flashlight
1 tube of RTV silicone, Code 103 or 106, or high temperature rubber cement rated between 450° F- 600° F
7/32" drill bit and drill
Socket/Ratchet Set

INSTALLATION PREPARATION

Fireplace:

1. Locate furniture and other materials away from front of fireplace to allow free access to fireplace.
2. Cover hearth and adjacent floor areas with a drop cloths to protect from soiling or marring surface.
3. Remove existing fireplace damper plate.
4. Thoroughly clean fireplace of ashes and soot.
5. Check chimney and smoke chamber for excessive buildup of creosote or soot. Also, check for obstructions, such as bird's nests. If chimney is excessively dirty, clean it or have someone clean it professionally before installing or using room heater.
6. If fireplace has an ash dump or outside air provision, these must be sealed off with metal or tightly packed non-combustible insulation to prevent cold air from entering fireplace chamber.

MASONRY INSERT INSTALLATION
INSTALLATION OPTIONS

This unit (appliance) may be installed into an all masonry fireplace, built in accordance with Uniform Building Code and National Fire Protection Association *(NFPA 211).*
NOTE: *Check with local building officials for any permits required for installation of this unit and notify your insurance company before proceeding with installation*

In cases such as improperly drawing fireplace, oversize flue liners or to meet codes in certain areas it is recommended that one of the flowing procedures be followed.

A. A **Chimney Connector** be installed from appliance flue exit through damper and with air-tight face seal. See option (A) page 6.
B. A listed **Direct Connect** be installed from appliance flue exit through damper into the first section of flue liner with air-tight seal. See option (B) page 6.
C. A **Positive Connect** be installed from appliance flue exit continuing up through entire chimney and exiting at top of the chimney. See option (C) page 6.

⚠ SAFETY NOTICE

If this appliance is not properly installed, a house fire may result. For your safety, follow the installation directions. Contact local building or fire officials about restrictions and installation inspection requirements in your area.

OPTION (A)

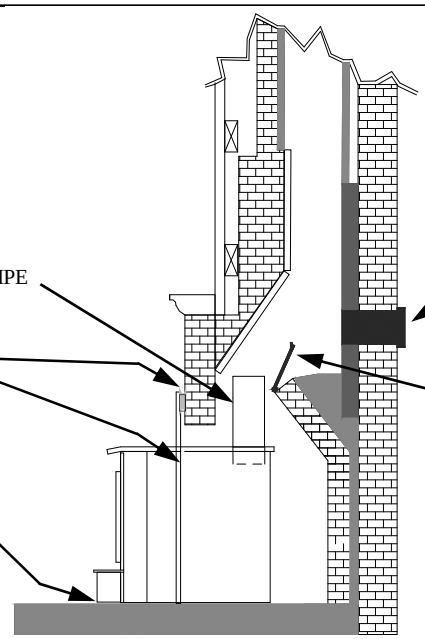

NOTE: New Buck Corporation grants no warranty, implied or stated, for the installation or maintenance of your appliance, and assumes no responsibility of any consequential damage (s).

OPTION (B)

NOTE: Follow installation instruction with Direct Connection Kit. (Kit sold separately)

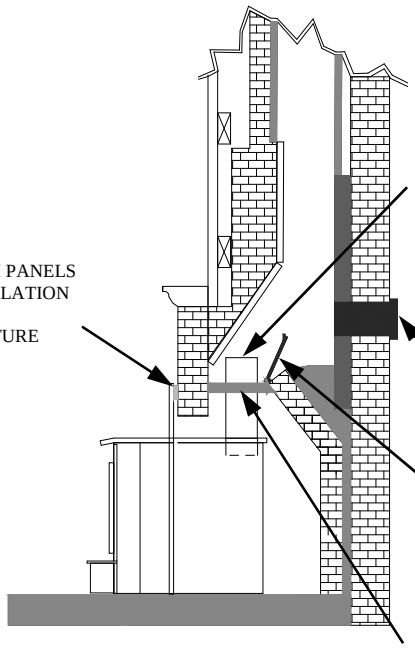

OPTION (C)

NOTE: Follow installation instruction with Positive Connection Kit. (Kit sold separately)

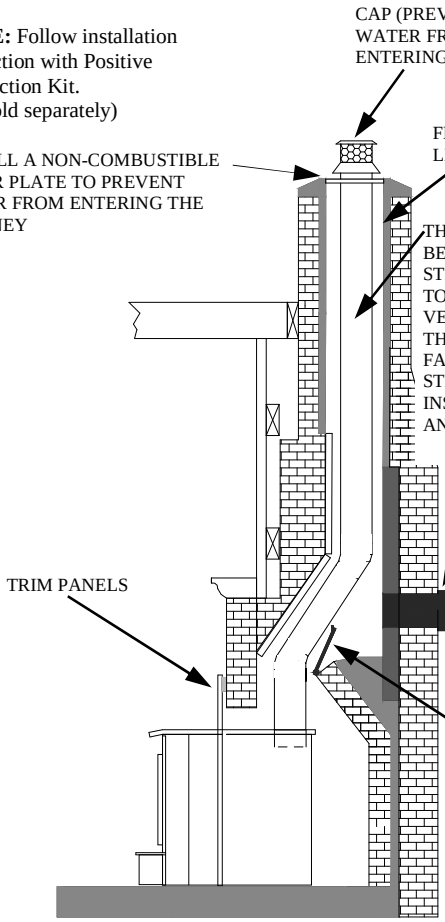

INSTALLATION PROCEDURE

(Use a chimney connector or a Listed Direct or Positive Connect) (See Page 6).

POSITIONING HEATER

When positioning heater, following conditions **MUST** be met! (See Figure 2).

1. The front of damper opening must be positioned **BEHIND** rear edge of lintel to ensure proper draft. (See Figure 2).

2. Center heater in fireplace opening.

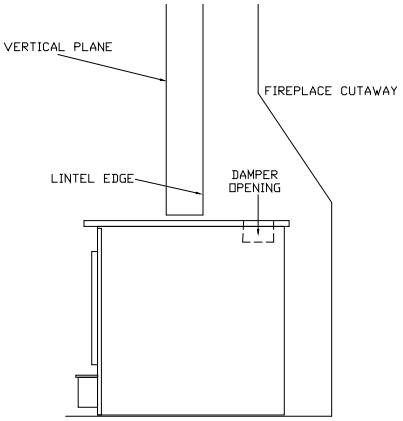

FIGURE 2 POSITIONING

MOUNTING TRIM PANELS

Afterunit is positioned, mark the mounting position of the trim panels as follows:

1. Place side trim panels in place, flat against face of fireplace. Mark down front edge of trim panel with a pencil to make a vertical reference line. (See Figure 3).
2. Place top (long) trim panel in place on top of unit. The panel should be flat against outside face of fireplace and standing vertically. Mark along lower edge of trim panel with a pencil to make a reference line for mounting.
3. Slide unit out of fireplace far enough to work behind trim panel reference lines.

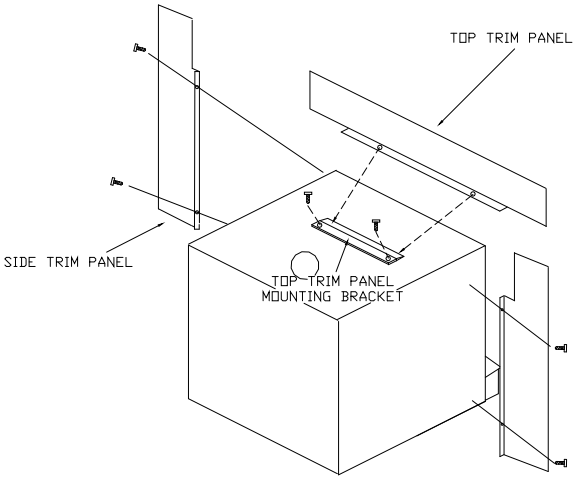

FIGURE 3 MOUNTING TRIM PANELS

4. Mount side trim panels. (See Figure 3).
   a. Position trim panel on reference line.
   b. Drill mounting holes in center of trim panel mounting brackets to allow for adjustment in and out if necessary.
   c. Mount trim panel using self-tapping screws provided.
5. Place top panel back on reference mark. Take top trim panel mounting bracket supplied with unit. Position bracket so it overlaps rear lip of top trim panel. Drill mounting holes in top of stove using holes in bracket as guide. Tighten down screws.
6. Now, follow installation procedures in listed direct connect or positive connect kit you are using and install heater and connect kit in fireplace. If not using one of installation methods shown on (Page 6). continue.
7. Slide unit back into fireplace. Check to be sure that trim panels are properly positioned and lie flat against front of fireplace. If one or more of the panels is out of position, slide unit out and reset by loosening mounting screws and repositioning in slot.
8. Reinstall top trim panel by sliding rear lip of top trim panel underneath front lip of mounting bracket already secured to top of unit.

NOTE: Mount top trim panel so that it sits in front of top of side trim panels.

9. Obtain brass trim kit provided with insert kit and slip over top and sides of trim panels. Top ends of brass may need to be trimmed to fit (See Figure 4).

10. Using insulation provided, peel and stick to back of panels overlapping fireplace dimensions by 1" on each side and top. (See Figure 4A).

11. Next using high heat silicone or furnace cement run heavy bead of caulking around where panels meet stove. (See Figure 4A).

12. Slide unit back into fireplace. Check to be sure that trim panels (and brass) are properly positioned and lie flat against front of fireplace. If panels are out of position, slide unit out and reset by loosening mounting screws and repositioning in the slot. With bar lift stove up in front. Place insulation across front and surface of hearth or bottom of fireplace to make complete seal.

13. To check seal of panels, use candle flame and go around entire area sealed by silicone and insulation. If flame leans toward inside of fireplace, add additional insulation. This ensures an airtight seal.

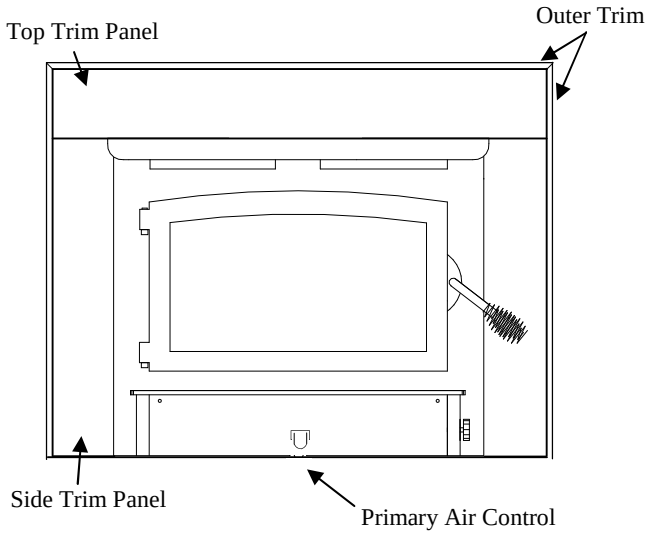

FIGURE 4

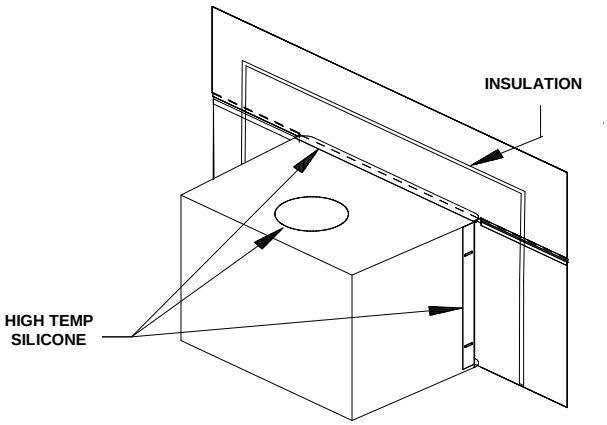

FIGURE 4A

FINAL CHECK

1. Recheck specified clearances.

2. Remove all foreign material from firebox area.

3. Open primary air control
   Primary Air Control: The primary air intake draft control is located at center of hearth. It is operated by moving handle **IN** to open (to allow air into the firebox) or **OUT** (to control or close off) air into firebox. (See Figure 4).

4. Plug power cord into a 115V AC outlet if optional motor is being used. “Do not run power cord under unit or in high traffic areas.”

5. Place crumpled pieces of newspaper in stove. Light it and close door. Ensure that stove draws properly through primary draft.

NOTE: “Do not use grate or elevate fire. Build wood fire directly on inner bottom of fire box.”

6. Check for smoke leaks around the door.

7. Open door and check for smoke escaping from front of stove. Smoking usually indicates a defective or poorly positioned chimney. Some chimneys with a marginal draft can be preheated by lighting newspaper and holding it near open damper with a poker or fire tong. Once chimney heats up, a proper draft can usually be obtained.

If a thorough review of Troubleshooting Guide in rear of manual does not reveal the problem, contact your dealer for assistance.

CAUTION

THE UNIT IS PAINTED WITH A SPECIALLY FORMULATED HIGH TEMPERATURE PAINT THAT CURES DURING THE FIRST TWO OR THREE FIRINGS. YOU MAY NOTICE A SLIGHT SMOKING EFFECT AND AN ODOR OF BURNING PAINT WHEN YOU BUILD THE FIRST FIRES. THIS IS NORMAL AND IS NOT A CAUSE FOR ALARM. IN SOME CASES, THESE FUMES WILL ACTIVATE A SMOKE ALARM. OPENING A WINDOW NEAR THE UNIT WILL ALLOW THESE FUMES TO ESCAPE. DO NOT BUILD A LARGE, ROARING FIRE UNTIL THIS CURING IS COMPLETE OR HEATER FINISH MAY BE DAMAGED.

The connector and/or chimney should be inspected at least once a month during heating season to determine if a creosote buildup has occurred.

CAUTION

NEVER USE GASOLINE, GASOLINE-TYPE LANTERN FUEL, KEROSENE, CHARCOAL LIGHTER FLUID OR SIMILAR LIQUIDS TO START OR "FRESHEN UP" A FIRE IN THE HEATER. KEEP ALL SUCH LIQUIDS WELL AWAY FROM THE STOVE WHEN IT IS IN USE. ALL FLUIDS OF THIS TYPE GIVE OFF VOLATILE FUMES AND CAN AND WILL EXPLODE!! DON'T TAKE A CHANCE WITH THE SAFETY OF YOUR HOME AND FAMILY.

SECTION III
PRE-FAB INSERT INSTALLATION

The Model 74 has been tested with the following UL listed manufactured Pre-Fab Fireplaces:

Heatilator	Security
Tempco	Preway
Marco	FMI
Woodside	Majestic

The Model 74 will fit any of models that are large enough to accept them.

NOTE: A full chimney liner is required in a Zero Clearance or pre-fab fireplace.

NOTE: The ash lip, smoke baffle and smoke shelf may be removed if necessary to provide room for these models. Any other alteration to unit will void ALL New Buck Corporation responsibility and liability. The warning label below supplied with stove must be attached to the back of fire -place.

Except for "**NOTES**" above, please follow instructions for Masonry Insert Installation including Minimum Clearances for stove and floor protector in Section II.

WARNING: This fireplace must be restored to its original condition for safe use, if the fireplace insert is removed.

SECTION IV
RESIDENTIAL FREESTANDING INSTALLATION

Select an installation location that will give best airflow from front of heater to remainder of the home.

PREPARING STOVE FOR INSTALLATION

1. Inspect unit for any obvious physical damage.
2. Plug power cord into a 115V AC outlet to test motor and fan. Do not run power cord under unit or in high traffic areas.
3. Check primary air draft control to ensure that it slides freely.(See Figure 4).
4. Remove any items from within the firebox. Spread a dropcloth on floor behind heater. Next, tilt heater so that back is on drop cloth.
5. **(Leg Kit):** If legs are to be used, obtain four legs, attach legs to holes in bottom of unit with bolts and washers supplied with leg kit. (See Figure 4).
6. **(Pedestal Kit):** If pedestal kit is being used and (**out side air is required for residential free standing installation** (**see page 25 Out Side Air Installation**). Open freestanding kit and obtain stand. Place stand against bottom of heater (angle side to heater).Center stand front to rear and also center stand left and right. Mark screw locations on bottom of stove through outer holes of stand mounting angles. Set stand aside and drill four 7/32" holes in heater bottom. Then mount stand to bottom of heater with screws provided. (See Figure 4A).
7. Obtain four (4) 3/16" self-tapping screws and secure stand to heater.
8. Reposition heater to upright position.

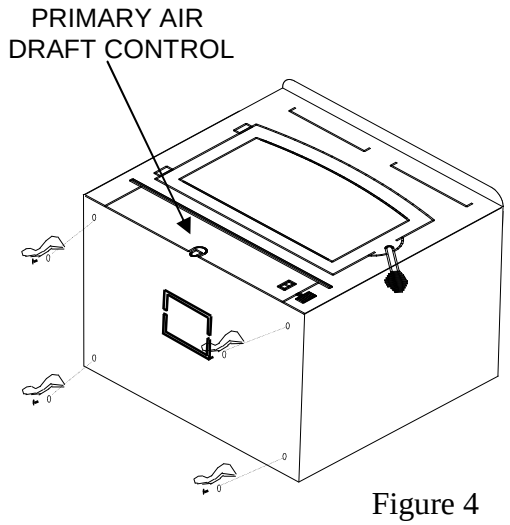

Figure 4

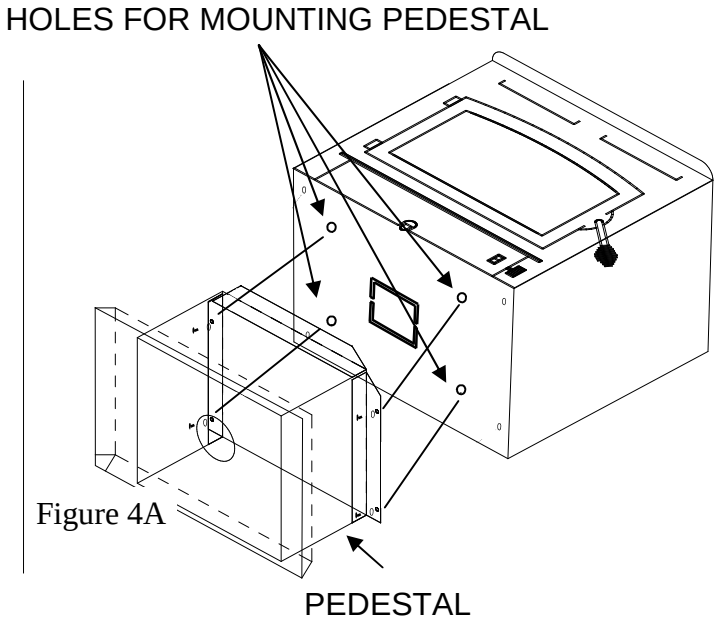

Figure 4A

Chimney

This model is designed for connection to any listed 2100º UL103 HT chimneys and parts. Follow chimneys manufacturer's instructions carefully.

This room heater must be converted to (1) a chimney complying with the requirements for Type HT chimneys in the Standard for chimneys, Factory-Built, Residential, Type and Building Heating Appliance, UL 103, or (2) a code approved masonry chimney with a flue liner.

Floor Protection:

When installing freestanding heater, a floor protector must be use. Floor protection must be 3/8” minimum thickness non-combustible material or equivalent.

How to use alternate materials and how to calculate equivalent thickness

An easy means of determining if a proposed alternate floor protector meets requirements listed in the appliance manual is to follow this procedure:

1. Convert specification to R-value:
   R-value is given—no conversion is needed.
   K-factor is given with a required thickness (T) in inches:
   C-factor is given: R=1/C
2. Determine the R-value of the proposed alternate floor protector.
   Use the formula in step (1) to convert values not expressed as “R”
   For multiple layers, add R-values of each layer to determine the overall R-value.
3. If the overall R-value of the system is grater than the R-value of the specified floor protector, the alternate is acceptable.

<u>Example:</u>
The specified floor protector should be 3/4” thick material with a K-factor of 0.84.
The proposed alternate is 4” brick with a C-factor of 1.25 over 1/8” mineral board with a K-factor of 0.29.

Step (a): Use formula above to convert specification to R-value. R= 1/K x T = 1/0.84 x .75 = 0.893

Step (b): Calculate R of proposed system. 4” brick of C=1.25, therefore Rbrick = 1/C = 1/1.25 =0.80 1/8” mineral board of K = 0.29, therefore Rmin.bd. =1/029 x0.125 = 0.431

Step (c): Compare proposed system R of 1.231 to specified R of 0.893. Since proposed system R is greater than required , the system is acceptable.

Definitions:

$$\text{Thermal conductance} = C = \frac{\text{Btu}}{(\text{hr})(\text{ft}^2)(°\text{F})} = \frac{\text{W}}{(\text{m}^2)(°\text{K})}$$

$$\text{Thermal conductance} = K = \frac{(\text{Btu})(\text{inch})}{(\text{hr})(\text{ft}^2)(°\text{F})} = \frac{\text{W}}{(\text{m})(°\text{K})} = \frac{(\text{Btu})}{(\text{hr})(\text{ft})(°\text{F})}$$

$$\text{Thermal conductance} = R = \frac{(\text{ft}^2)(\text{hr})(°\text{F})}{\text{Btu}} = \frac{(\text{m}^2)(°\text{K})}{\text{W}}$$

Install in accordance with 24 CFR, Part 3280 (HUD).

CAUTION
SPECIAL METHODS ARE REQUIRED WHEN PASSING THROUGH A WALL OR CEILING. SEE INSTRUCTIONS AND BUILDING CODES. "DO NOT CONNECT THIS UNIT TO A CHIMNEY FLUE SERVING ANOTHER APPLIANCE."

DETERMINING CHIMNEY LOCATION

A. CEILING EXIT (USING SINGLE WALL (minimum 24ga.) pipe and 2100° UL 103 HT type chimney system listed with manufacturer in this section of manual.) (See Page 12).

1. Suspend a plumb bob from ceiling above unit so that weight is hanging in center of flue exit. (A small weight on a string will serve as a plumb bob). Mark ceiling where string is suspended to locate center of chimney.

2. After locating center of hole, install ceiling support box, chimney flashing and rain cap per chimney manufacturer's instructions.

Now connect stove and ceiling support box using #24 ga. minimum blue or black steel connector pipe **(DO NOT USE GALVANIZED PIPE).** Connect each section so crimped end faces downward and secure each section to each other using at least three (3) sheet metal screws or rivets. Also use three (3) sheet metal screws to fasten pipe to collar on heater. (See Figure 5. Page 14).

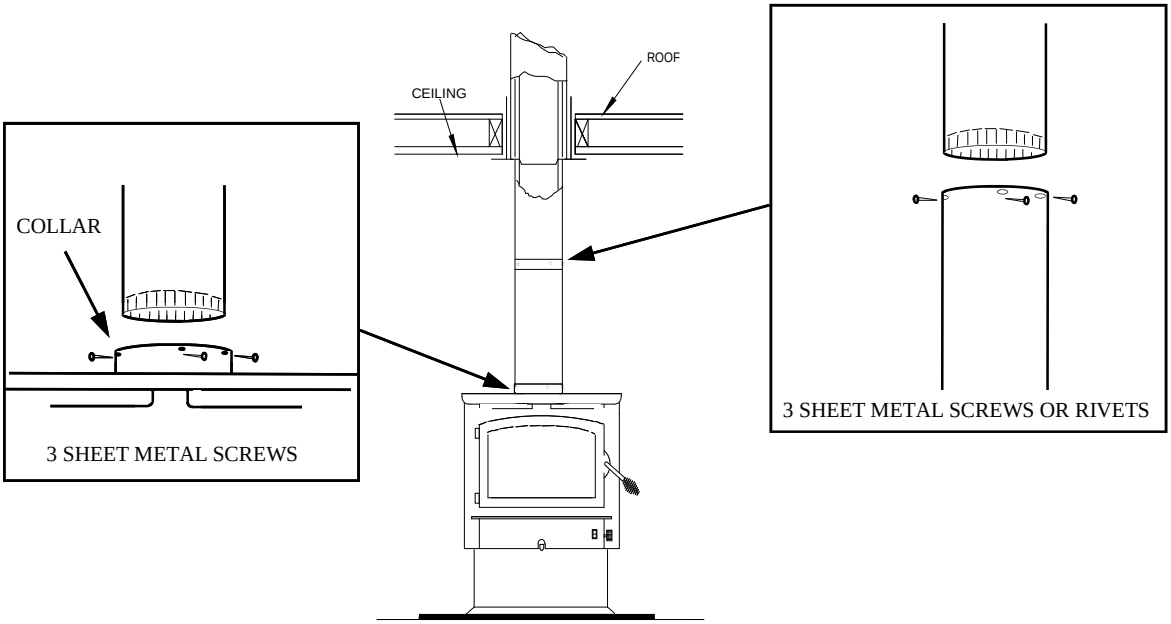

Figure 5

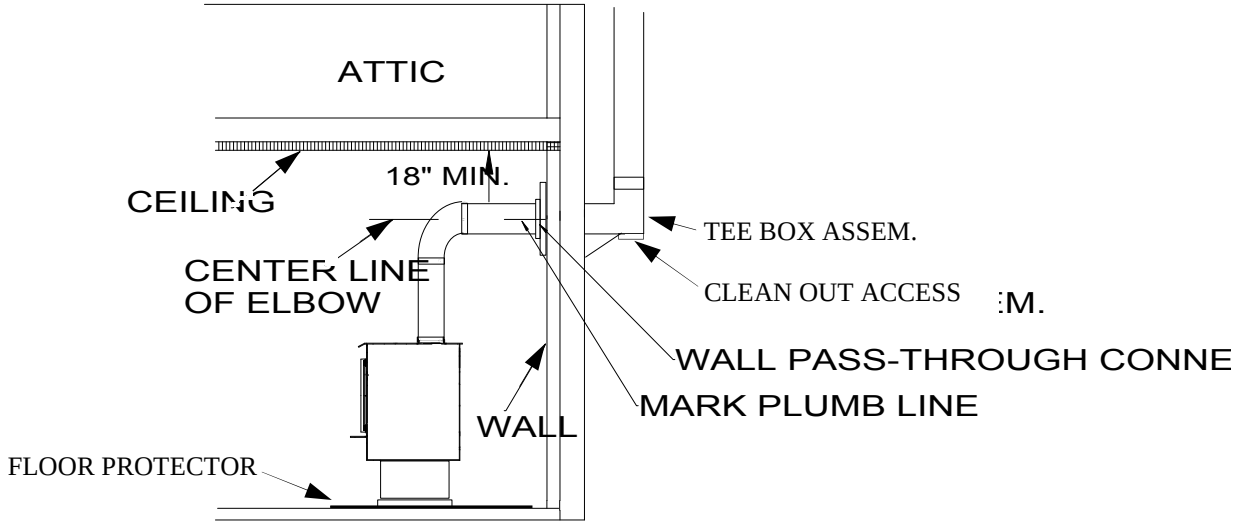

Figure 6

B. Wall Exit Into Metal Tee-Box

1. Mark plumb line on wall directly behind center of heater. (See Figure 6).

NOTE: When using 24# ga. minimum blue or black steel pipe, maintain 18" between pipe and ceiling.

NOTE: Floor protector must be under horizontal pipe exit (See Figure 9, Page 19).

2. Place vertical portion of heater pipe and elbow in position and project a point onto plumb line level with center of elbow.

3. Measure up so there will be at least 1/4" rise per foot of horizontal connector pipe, maintaining clearances to ceiling as noted in (Figure 6 Page 14). This will give you center of hole for chimney penetration.

4. After locating center of penetration, install tee-box and chimney as per chimney manufacturer's specifications.

5. Connect chimney connector to tee-box using #24 ga. minimum blue or black steel connector pipe. **DO NOT** use galvanized pipe. Connect each section so the crimped end faces downward and secure each section to each other using three (3) sheet metal screws or rivets. (See Figure 5).

C. Wall Exit Into Masonry Flue (Using Single Wall Pipe)

1. Before connecting these units to a masonry chimney, determine that masonry flue pass-through connector thimble meets NFPA-211 Code and local building codes and is a minimum of 18" from ceiling. If connector thimble does not meet these codes, the pass -through connector must be modified.

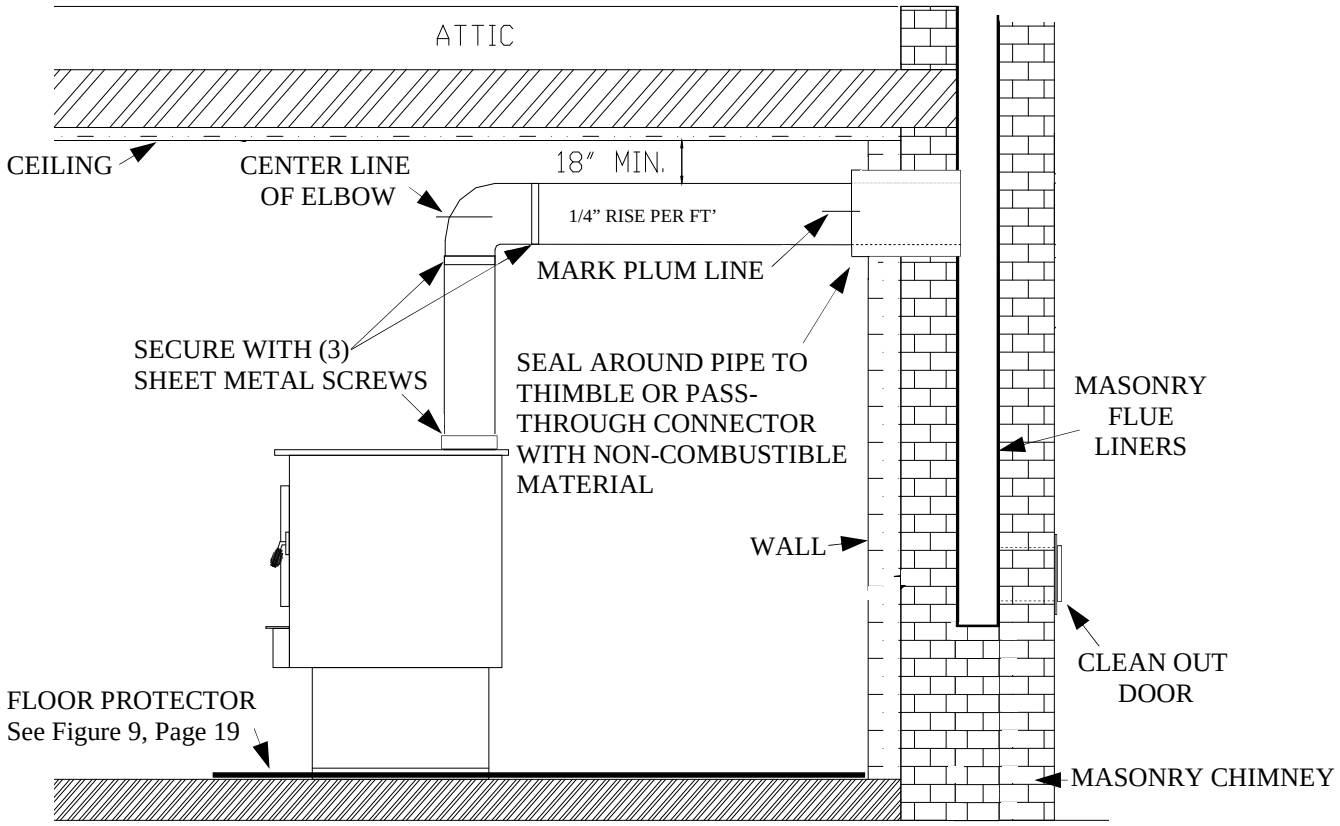

Figure 7

Connectors may pass through walls or partitions constructed of combustible material if connector is:

(a) Either listed for wall pass-through or is routed through a device listed for wall pass-through and is installed in accordance with conditions of listing.

(b) Selected or fabricated in accordance with conditions and clearances as stated in **NFPA-211** Code. Any unexposed metal that is used as part of a wall pass-through system and is exposed to flue gases shall be constructed of stainless steel or other equivalent material that will resist corrosion, softening or cracking from flue gases at temperatures up to 1800° F.

In addition, a connector to a masonry chimney shall extend through wall to inner face or liner but not beyond and shall be firmly cemented to masonry.

EXCEPTION:
A thimble may be used to facilitate removal of chimney connector for cleaning, in which case thimble shall be permanently cemented in place with high-temperature cement.

2. Once through-the-wall thimble codes are met, simply connect chimney collar to wall pass-through connector using #24 ga. minimum, blue or black steel connector pipe as follows:

   (a) Maintain 1/4" rise per foot (horizontal length) from appliance to chimney.

   (b) Connect each section so crimped end faces downward.

   (c) Secure each section to each other using at least three (3) sheet metal screws or rivets.

   (d) Use three (3) sheet metal screws to fasten pipe to connector collar on heater.

D. Ceiling Exit-Close Clearance

1. Suspend a plumb bob from ceiling above unit so that weight is hanging in center of flue exit (A small weight on a string will serve as a plumb bob). Mark ceiling where string is suspended to locate center of chimney hole.

2. After locating center of hole, install ceiling support box, chimney flashing and rain cap.

3. Install Double Wall Connector and close clearance chimney systems per manufacturer’s written instructions. See stove manufacturer's list of tested pipes in this manual.
   (See Page 17).

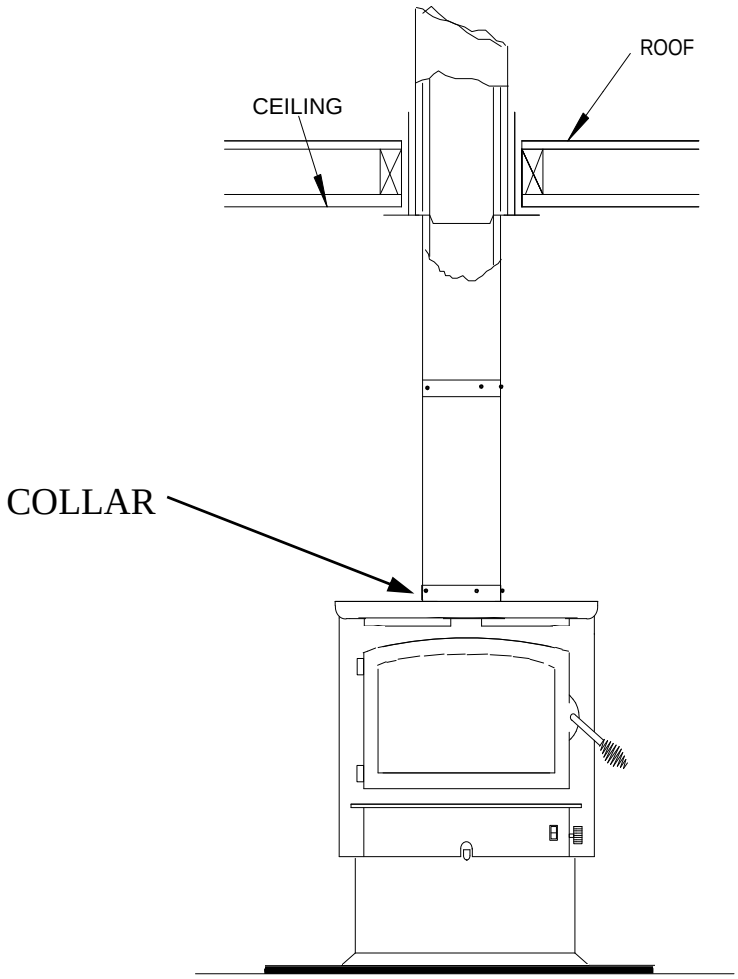

Figure 8

This unit may be installed using the following double wall close clearance chimney systems:
(1) 6" Simpson Dura-Vent double wall chimney connector "Type DVL" and 6" Simpson Dura-Vent 2100º HT. "Type DP" chimney. **(2)** 6" Security Type DL double wall connector and 6" Security Type "ASHT" High Temp Chimney. **(3)**6" Selkirk Metal Bestos Model "DS" double wall connector- 6" Selkirk Metal Bestos Model SSII Type HT Chimney System. **(4)** 6" Metal Fab Type "DW" double wall connector– 6" Metal Fab 2100 HT chimney. **(5)** 6" Air Jet. **(6)** Jakes Evans. For minimum clearances (See pages 19,20,21).

Alcove Installation Clearances

Alcove installation must use 6" Double Wall Connector and 6" Type 2100° UL 103 HT Pipe listed for close clearance reduction that is listed in this manual. For measurements and minimum clearances (See page 23).

FINAL CHECK

1. Recheck specified clearances.

2. Remove all foreign material from firebox area.

3. Open primary air draft.

4. Plug power cord into a 115V AC outlet when using with optional motor. "Do not run power cord under unit or in high traffic areas".

5. Place crumpled pieces of newspaper in stove. Light it and close door. Ensure that stove draws properly through primary draft.

6. Check for smoke leaks around door.

CAUTION

Open door and check for smoke escaping from front of stove. Smoking usually indicates a defective or poorly positioned chimney. Some chimneys with a marginal draft can be preheated by lighting newspaper and holding it near open damper with a poker or fire tong. Once chimney heats up, a proper draft can usually be obtained.

If a thorough review of Troubleshooting Guide in the rear of manual does not reveal problem, contact your dealer for assistance.

CAUTION

The unit is painted with a specially formulated high temperature paint that cures during first two or three firings. You may notice a slight smoking effect and an odor of burning paint when you build first fires. This is normal and is not a cause for alarm. In some cases, these fumes will activate a smoke alarm. Opening a window near unit will allow these fumes to escape. DO NOT build a large, roaring fire until this curing is complete or the heater finish may be damaged.

CLEARANCES FOR MODEL 74
MINIMUM CLEARANCES TO COMBUSTIBLES
RESIDENTIAL / SINGLE WALL CONNECTOR
WITHOUT OPTIONAL CLOSE CLEARANCE SHIELDS
AND PIPE SHIELD

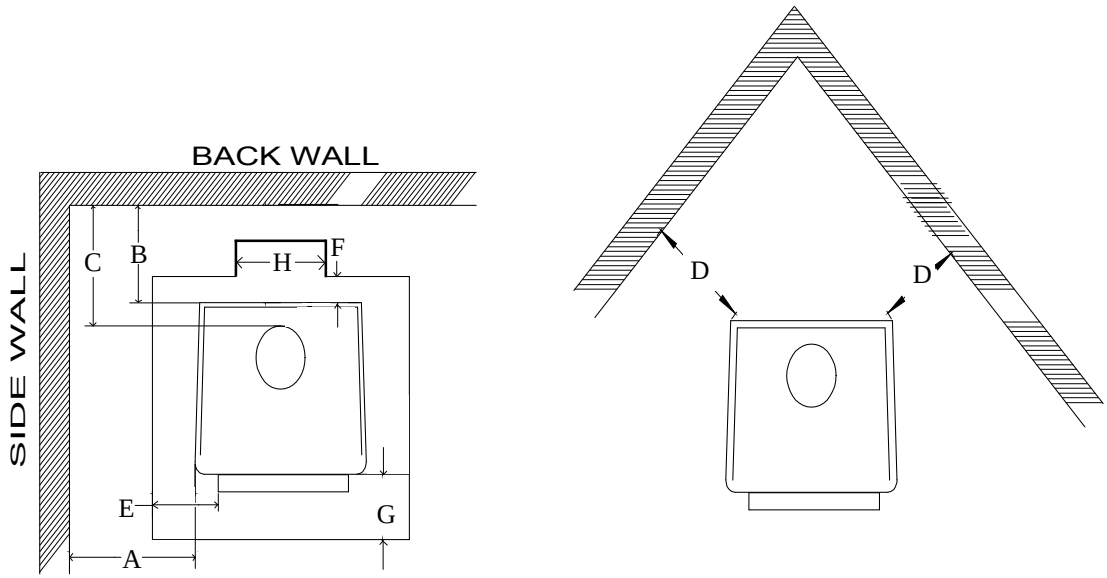

Figure 9

	A	B	C	D	E	F	G	H
MODEL 74	25"	8"	10.5"	8"	8"	6"	20"	10”

NOTE: All clearances are to combustibles using single wall pipe without optional close clearance shields and pipe shield, minimum floor protector**.**
Clearances above may be reduced. Follow **NFPA-211** codes if available or follow instructions on next page.

CLEARANCES FOR MODEL 74
MINIMUM CLEARANCES TO COMBUSTIBLES
RESIDENTIAL / MOBILE HOME
DOUBLE WALL OR SHIELDED SINGLE
WALL CONNECTOR WITH OPTIONAL CLOSE
CLEARANCE SHIELDS AND PIPE SHIELD

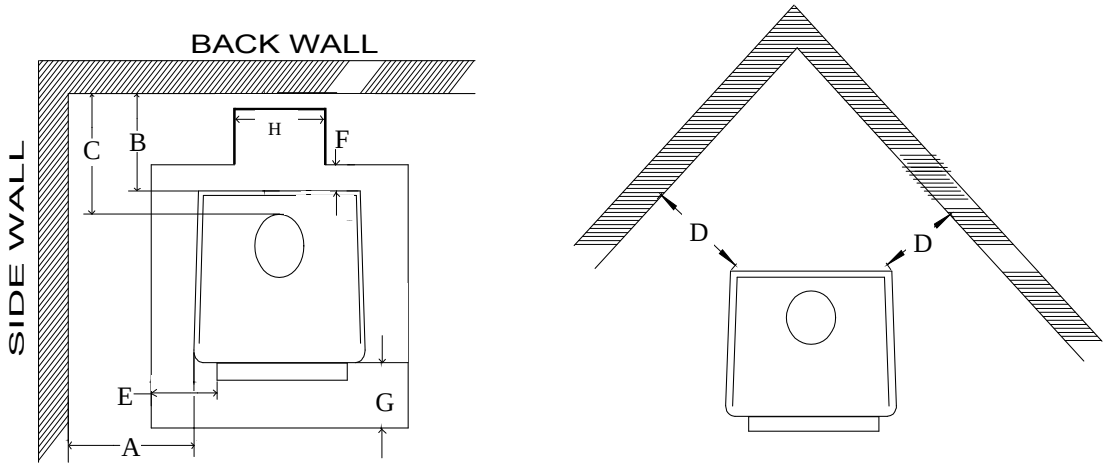

Figure 10

	A	B	C	D	E	F	G	H
MODEL 74	23"	4"	6.5"	4"	8"	6"	20"	10”

NOTE: All clearances are to combustibles with double wall or shielded single wall pipe with optional close clearance shields and pipe shield, minimum floor protector.

CLEARANCES FOR MODEL 74
MINIMUM CLEARANCES TO COMBUSTIBLES
RESIDENTIAL / MOBILE HOME
DOUBLE WALL OR SHIELDED SINGLE WALL CONNECTOR WITHOUT OPTIONAL CLOSE CLEARANCE SHIELDS

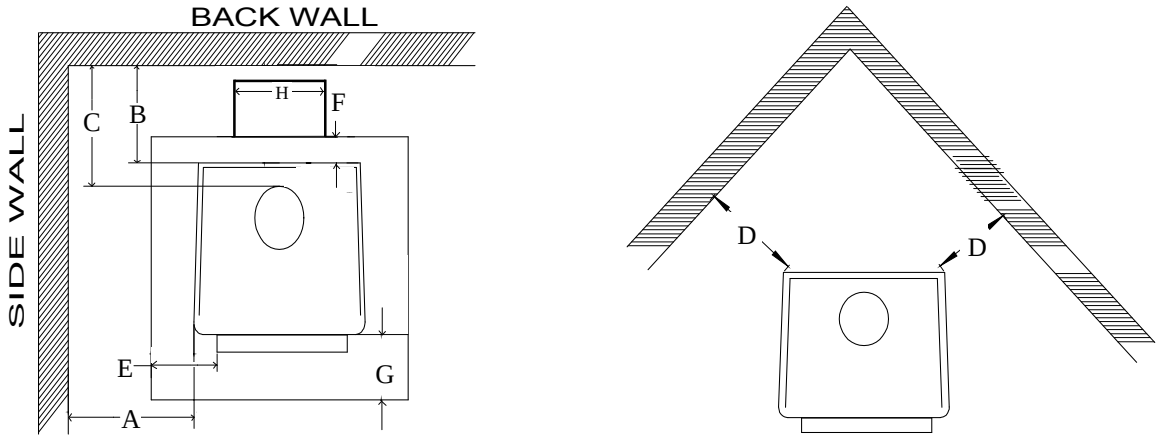

Figure 10

	A	B	C	D	E	F	G	H
MODEL 74	25"	4"	6.5"	4"	8"	6"	20"	10”

NOTE: All clearances are to combustibles using double or shielded single wall pipe without close clearance shields and pipe shield, minimum floor protector.

Installation of (Optional) Close Clearance Shields and Pipe Shield

1. Taking close clearance side shields, hold up to side of stove leaving 1/4" gap between shield and top of stove.
2. Make reference mark in center of pre-punched hole in top & bottom of shield. Drill two (2) 3/32" holes in back of unit on each side. Insert self tapping screws in through shield into stove. (SEE PICTURE BELOW)
3. Drill two (2) 3/16" holes in the sides of stove where shield meets front side. Insert two (2) 3/8" self-tapping screws. (SEE PICTURE BELOW)
4. Next loosen two (2) top screws holding side shield at rear top. Insert pipe shield where back shield and top rear side shield meets. Leave a 1” gap from top of stove to pipe shield, tighten screws. (SEE PICTURE BELOW)

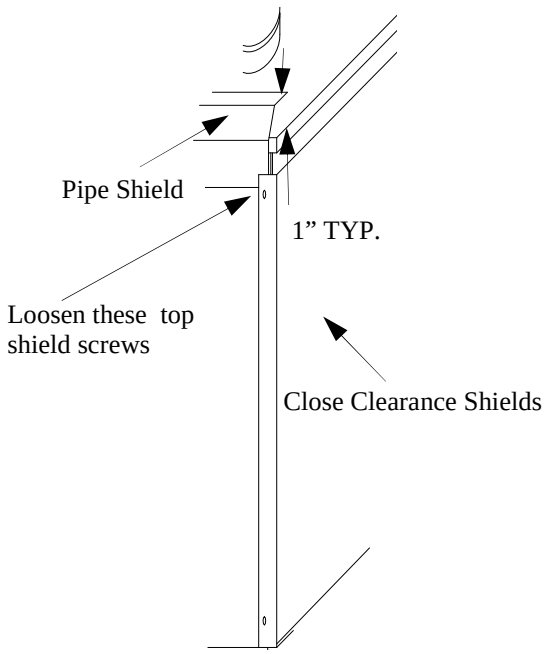

Installation of (Optional) Pipe Shield

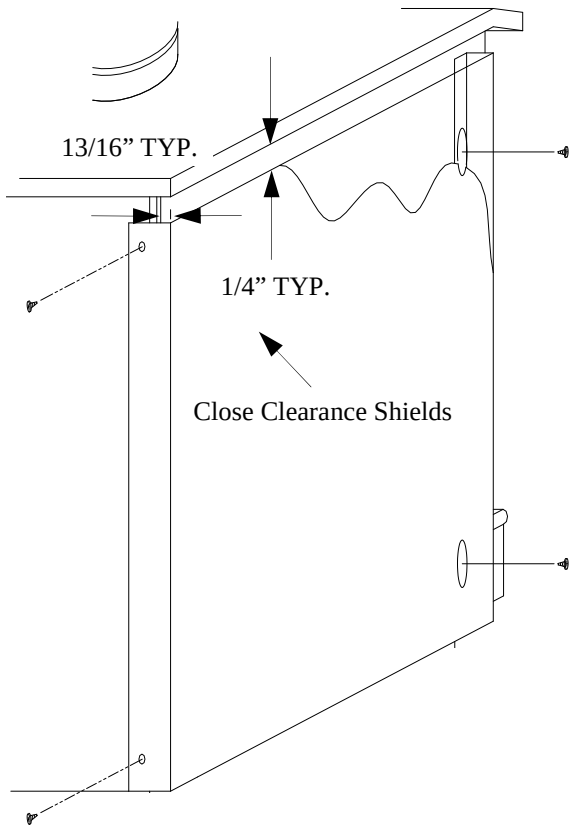

Installation of (Optional) Close Clearance Shields

CLEARANCES FOR MODEL 74
ALCOVE INSTALLATION DOUBLE WALL
OR SHIELDED SINGLE WALL CONNECTOR
WITH OPTIONAL CLOSE CLEARANCE SHIELDS
AND PIPE SHIELD

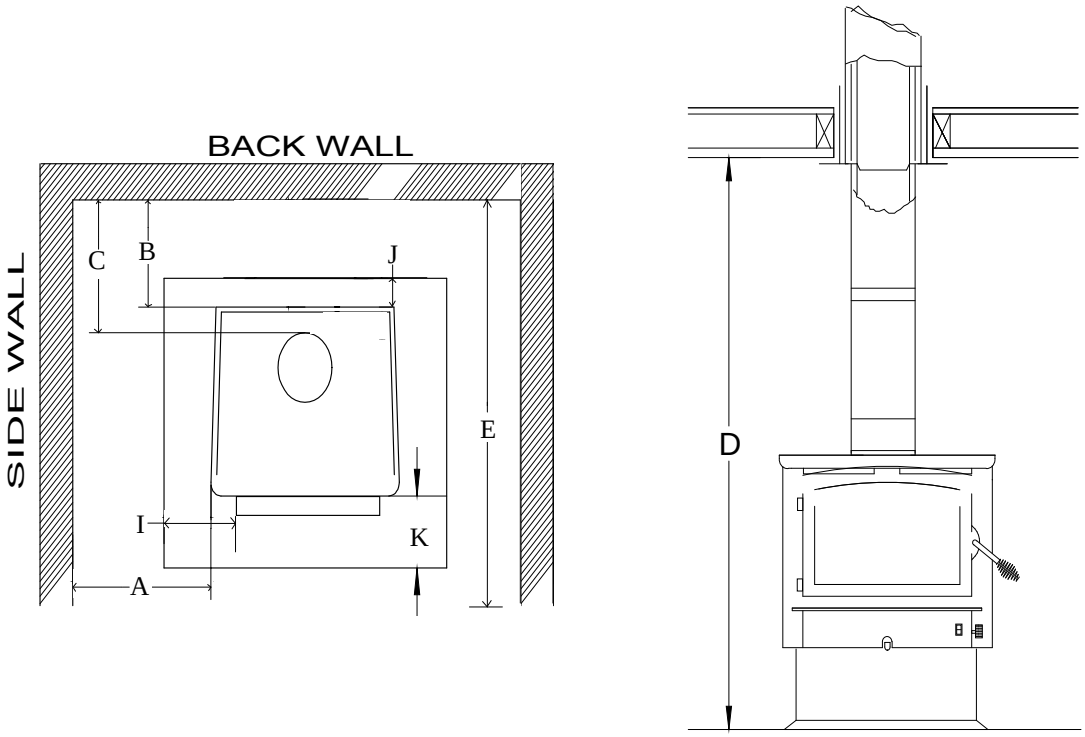

Figure 11

	A	B	C	D	E	I	J	K
MODEL 74	23"	4"	6.5"	84"	36"	8”	6”	20”

NOTE: All clearances are to combustibles using double wall or shielded single wall pipe and optional close clearance shields and pipe shield only, minimum floor protector.

SECTION V
FREESTANDING MOBILE HOME INSTALLATION

Floor Protection:

When installing freestanding heater, a floor protector must be use. Floor protection must be 3/8” minimum thickness non-combustible material or equivalent.

How to use alternate materials and how to calculate equivalent thickness

An easy means of determining if a proposed alternate floor protector meets requirements listed in the appliance manual is to follow this procedure:

1. Convert specification to R-value:
   R-value is given—no conversion is needed.
   K-factor is given with a required thickness (T) in inches:
   C-factor is given: R=1/C
2. Determine the R-value of the proposed alternate floor protector.
   Use the formula in step (1) to convert values not expressed as “R”
   For multiple layers, add R-values of each layer to determine the overall R-value.
3. If the overall R-value of the system is grater than the R-value of the specified floor protector, the alternate is acceptable.

<u>Example:</u>
The specified floor protector should be 3/4” thick material with a K-factor of 0.84.
The proposed alternate is 4” brick with a C-factor of 1.25 over 1/8” mineral board with a K-factor of 0.29.

Step (a): Use formula above to convert specification to R-value. R= 1/K x T = 1/0.84 x .75 = 0.893

Step (b): Calculate R of proposed system. 4” brick of C=1.25, therefore Rbrick = 1/C = 1/1.25 =0.80 1/8” mineral board of K = 0.29, therefore Rmin.bd. =1/029 x0.125 = 0.431

Step (c): Compare proposed system R of 1.231 to specified R of 0.893. Since proposed system R is greater than required , the system is acceptable.

Definitions:

$$\text{Thermal conductance} = C = \frac{\text{Btu}}{(\text{hr})(\text{ft}^2)(°\text{F})} = \frac{\text{W}}{(\text{m}^2)(°\text{K})}$$

$$\text{Thermal conductance} = K = \frac{(\text{Btu})(\text{inch})}{(\text{hr})(\text{ft}^2)(°\text{F})} = \frac{\text{W}}{(\text{m})(°\text{K})} = \frac{(\text{Btu})}{(\text{hr})(\text{ft})(°\text{F})}$$

$$\text{Thermal conductance} = R = \frac{(\text{ft}^2)(\text{hr})(°\text{F})}{\text{Btu}} = \frac{(\text{m}^2)(°\text{K})}{\text{W}}$$

Install in accordance with 24 CFR, Part 3280 (HUD).

TOOLS FOR INSTALLATION

This model is designed for connection to any 2100° UL 103 HT chimneys. Follow chimney manufacturer's instructions carefully.

Drop cloth, 3/32" Metal drill bit, 5/16" magnetic socket chuck adapter, 5/16" wrench (box or socket) or adjustable wrench, Jigsaw with masonry, metal and wood blades

WARNING: DO NOT INSTALL IN A SLEEPING ROOM.

PREPARING STOVE FOR INSTALLATION

1. Remove protective plastic wrapping from unit, inspect unit for any obvious physical damage.
2. Plug power cord into a 115V AC outlet to test motor and fan when optional motor is being used. “Do not run power cord under unit or in high traffic areas”.
3. Check primary air draft control to ensure that it slides freely.(See Figure 12).
4. Remove any items from within firebox. Spread a dropcloth on floor behind heater. Next, tilt heater so that back is on drop cloth.
5. **(Leg Kit):** If legs are to be used, obtain four legs, attach legs to holes in bottom of unit with bolts and washers supplied with leg kit. (See Figure 12).
6. **(Pedestal Kit):** If pedestal kit is being used **(and out side air is required see below, Out Side Air Installation).** Open freestanding kit and obtain stand. Place stand against bottom of heater (angle side to heater). Center stand front to rear and also center stand left and right. Mark screw locations on bottom of stove through outer holes of stand mounting angles. Set stand aside and drill four 7/32" holes in heater bottom. Before attaching heater to the stand, take a large flat screwdriver or pliers and remove 2" x 2" knockout on bottom of unit. (See Figure 12A). Then mount stand to bottom of heater with screws provided. (See Figure 12A).
7. Obtain four (4) 3/16" self-tapping screws and secure stand to heater.
8. Reposition heater to upright position.

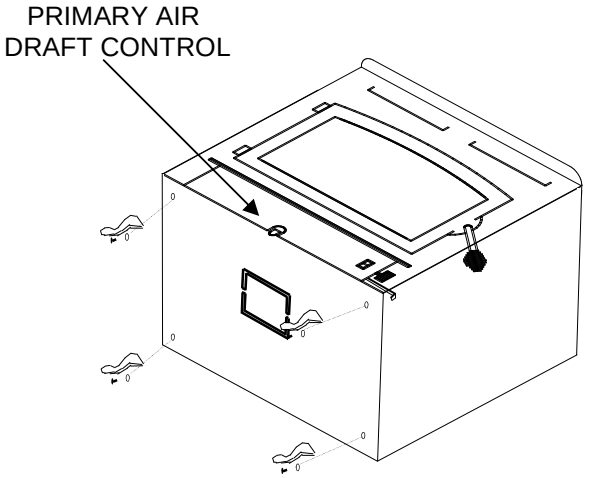

Figure 12

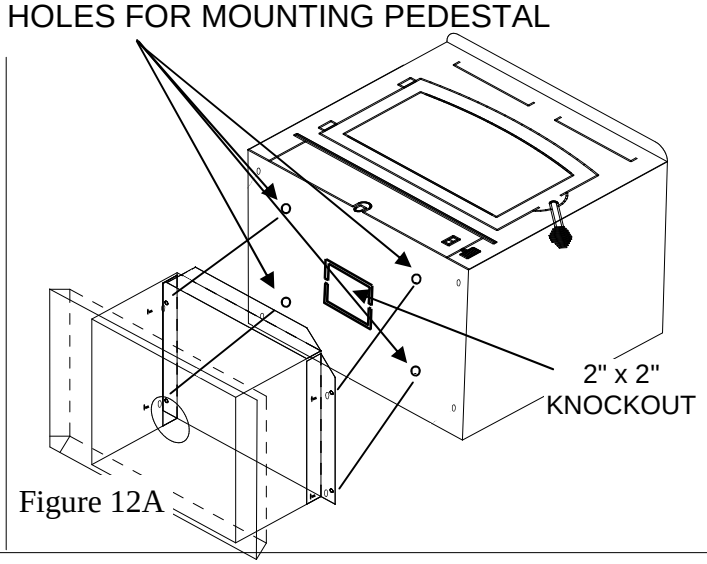

Figure 12A

Out Side Air Installation

CAUTION

THE STRUCTURAL INTEGRITY OF MOBILE HOME FLOOR MUST BE MAINTAINED. (MOVE OPENING AND/OR REPOSITION HEATER LOCATION IFNECESSARY).

1. Select an installation location that will give best airflow from front of heater to remainder of home.
2. Place protective floor pad in position. For minimum floor protection (See Page 24).
3. Place unit on pad making sure minimum clearance specifications are met. For minimum clearance to combustibles (See Page 23).
4. Lightly mark with a pencil location of pedestal on protective pad.
5. Next, remove four (4) screws holding the heater to stand. Position heater out of the way of installation area.
6. Check that pedestal stand is still aligned with marks on protective pad, now mark outside air opening in bottom of pedestal stand on to pad.
7. Mark center line of outside air opening. Set stand aside for now.
8. Cut a 4 1/4" diameter hole in pad and continue through floor.

CAUTION!!
The structural integrity of the home floor must be maintained. (Move opening and/or reposition heater location if necessary).

9. Now, reposition pedestal stand and set on pad being sure to line stand up with reference marks.
10. Using an electric drill and 3/8" masonry bit, drill four (4) holes in protective pad using holes in bottom of pedestal stand as a guide. Be careful to drill only through pad and not into floor. Change bit to a 1/4" metal bit and drill through floor.
11. Using four (4) 3/8" x 1-1/2" lag bolts provided, secure pedestal stand and pad to floor of home.

CAUTION:
IF A THICK FLOOR PROTECTOR IS USED, YOU MAY HAVE TO USE LONGER LAG BOLTS.

12. Obtain outside air duct from box in pedestal kit marked FA P21B.
13. Slip duct down through the 4-1/4" hole until face of outside air duct with screen wire, contacts bottom of pedestal.
14. Secure outside air duct to inside bottom of pedestal using the four (4) #10x1 screws provided. (See Figure 12B).
15. Set heater back onto stand and resecure using screws.
16. NOTE: If home is underpinned, you must duct through underpin as shown. (See Figure 12C).

Figure 12B

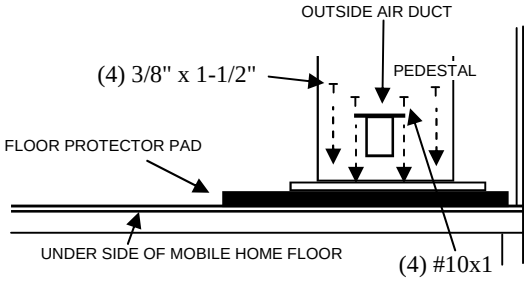

Figure 12C

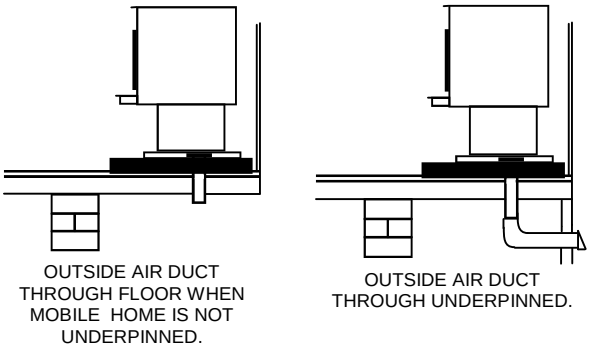

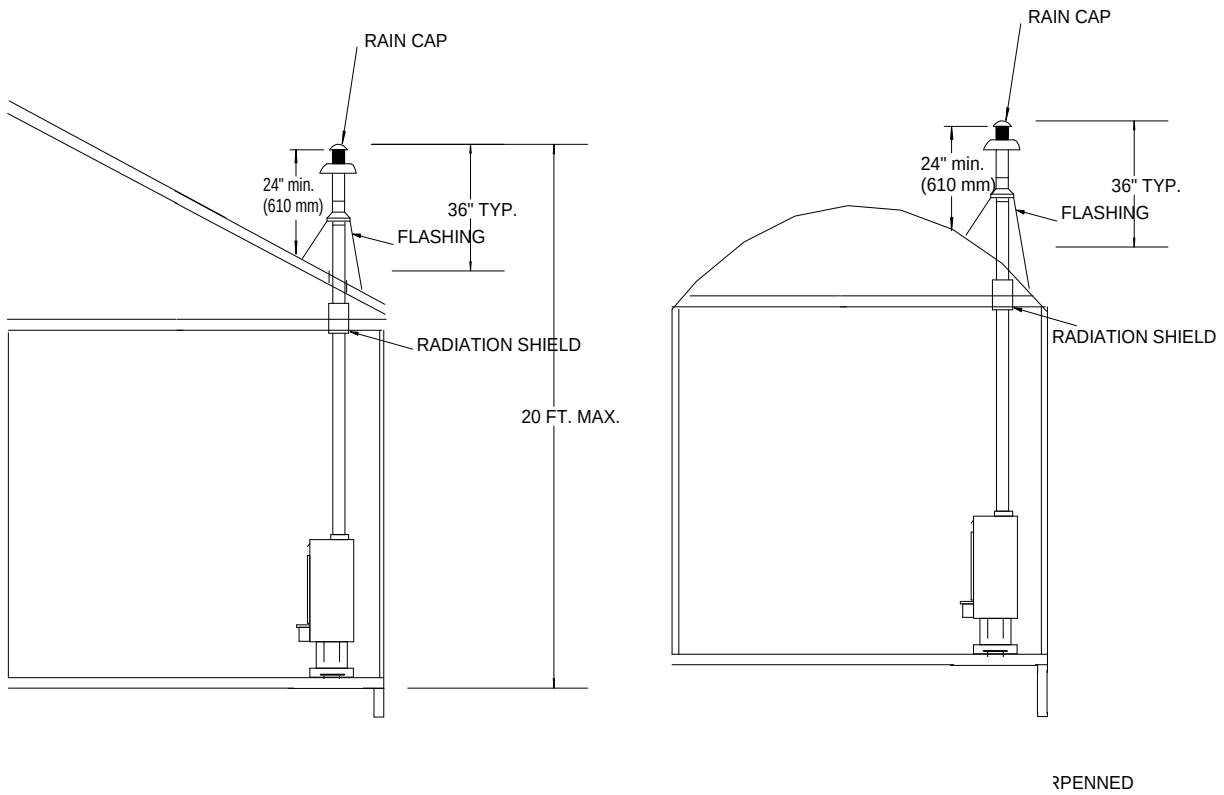

Figure 12D

For ceiling exit using close clearance listed chimney

1. Suspend a plumb bob from ceiling above unit so that weight is hanging in center of flue exit. (A small weight on a string will serve as a plumb bob). Mark ceiling where string is suspended to locate center of chimney hole.

2. After locating center of hole install ceiling support box, chimney, flashing and rain cap using listed 2100° UL 103 HT chimney only. Only use pipe listed in this manual.

CAUTION
REFER TO CHIMNEY MANUFACTURER'S INSTRUCTIONS FOR ASSEMBLY AND DISASSEMBLY OF CHIMNEY PARTS. BE SURE TO FOLLOW CHIMNEY INSTRUCTIONS FOR PROPER CLEARANCES TO COMBUSTIBLE AND PROPER AIR SPACING REQUIRED.

3. Add additional pipe until both of the following are met:
   (a) Chimney pipe is 3 feet higher than roof at point where it penetrates roof and
   (b) Chimney pipe height is at least 2 feet higher than any part of roof within 10 feet of chimney. See (Page 27, Figure 12D).

4. Next, install a New Buck Corporation chimney connector to flue of heater or use 3 “ELL” brackets and secure to top of heater and pipe.

5. Using single wall chimney connector, connect heater to chimney by following manufacturer's installation instructions exactly. (See Figure 13).

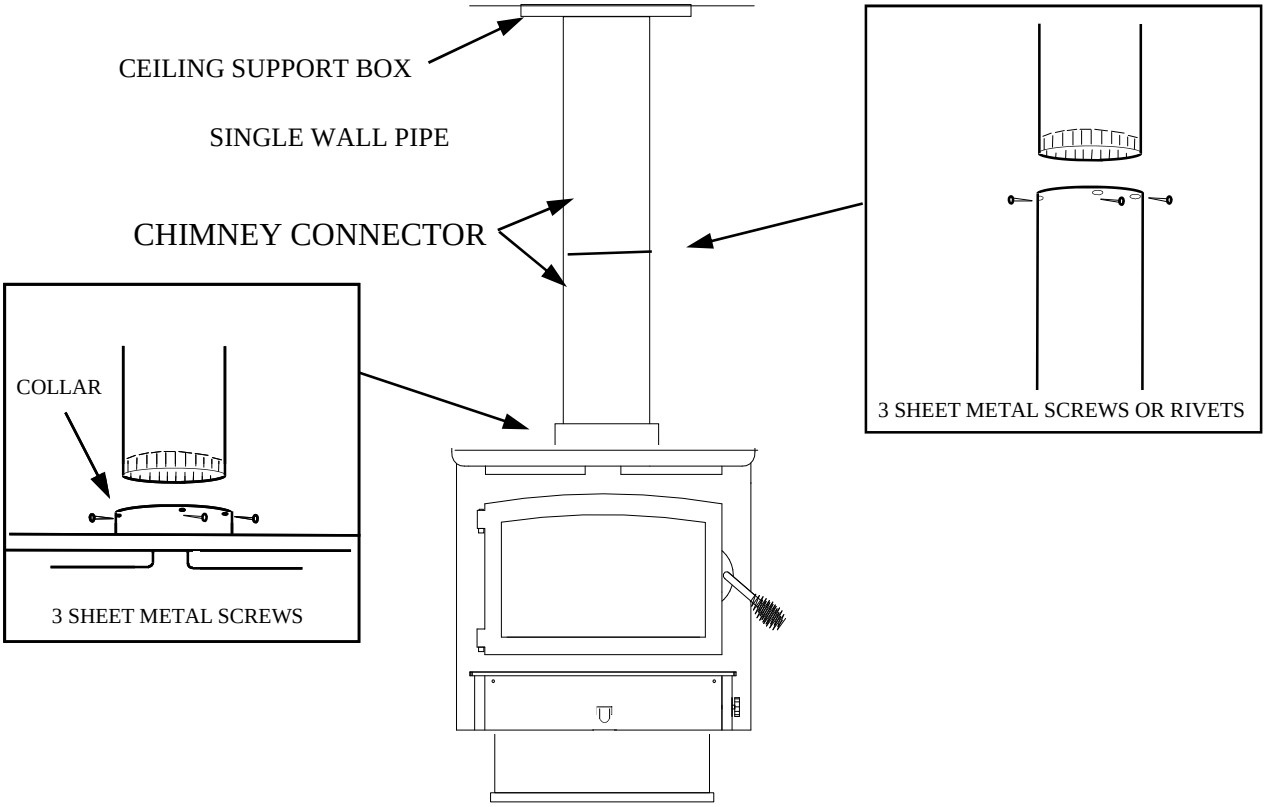

FINAL CHECK

1. Recheck specified clearances.
2. Remove all foreign material from firebox area.
3. Open primary air draft.

   NOTE: Plug power cord into a 115 VAC outlet. (If optional motor is being used.) Route cord to prevent damage to cord insulation from heat and sharp objects. Keep cord out of way of traffic to prevent damage caused by tripping, etc.

4. Plug power cord into a 115V AC outlet when using with optional motor. Do no run power cord under unit or in high traffic areas.
5. Place crumpled pieces of newspaper in stove. Light it and close door. Ensure that stove draws properly through primary draft.
6. Check for smoke leaks around door.
7. Open door and check for smoke escaping from front of stove. Smoking usually indicates a defective or poorly positioned chimney. Some chimneys with a marginal draft can be preheated by lighting newspaper and holding it near open damper with a poker or fire tong. Once chimney heats up, a proper draft can usually be obtained.

If a thorough review of Troubleshooting Guide in rear of manual does not reveal problem, contact your dealer for assistance.

CAUTION

THE UNIT IS PAINTED WITH A SPECIALLY FORMULATED HIGH TEMPERATURE PAINT THAT CURES DURING FIRST TWO OR THREE FIRINGS. YOU MAY NOTICE A SLIGHT SMOKING EFFECT AND AN ODOR OF BURNING PAINT WHEN YOU BUILD FIRST FIRES. THIS IS NORMAL AND IS NOT A CAUSE FOR ALARM. IN SOME CASES, THESE FUMES WILL ACTIVATE A SMOKE ALARM. OPENING A WINDOW NEAR UNIT WILL ALLOW THESE FUMES TO ESCAPE. DO NOT BUILD A LARGE ROARING FIRE UNTIL THIS CURING PROCESS IS COMPLETE OR HEATER FINISH MAY BE DAMAGED.

SECTION VI
WOOD HEATER SAFETY

Certain safety hazards are inherent in any wood heater installation. You should be aware of these so that a safe and proper installation can be made.

1. FAULTY CHIMNEY: An older masonry chimney should be thoroughly checked to be sure there are no holes or weak spots which could allow sparks or hot gases to escape.
2. HEAT CONDUCTION: Placing combustible materials too close to a heater or chimney can be a fire hazard.

By keeping these particular hazards in mind as you install and use your room heater you can ensure a safe, reliable installation.

The chimney and chimney connector should be inspected once every two months. Any build-up of soot should be removed to prevent risk of a chimney fire. To remove chimney or chimney connector: Remove screws or fasteners. Remove pipe and clean with steel brush. Replace chimney or chimney connector and replace screws and/or fasteners.

CAUTION

NEVER USE GASOLINE, GASOLINE TYPE LANTERN FUEL, KEROSENE, CHARCOAL LIGHTER FLUID OR SIMILAR LIQUIDS TO START OR "FRESHEN UP" A FIRE IN THE HEATER. KEEP ALL SUCH LIQUIDS WELL AWAY FROM THE STOVE WHEN IT IS IN USE. ALL FLUIDS OF THIS TYPE GIVE OFF VOLATILE FUMES AND CAN AND WILL EXPLODE!! DON'T TAKE A CHANCE WITH THE SAFETY OF YOUR HOME AND FAMILY.

CAUTION: Never remove ashes from heater with blower running.

DISPOSAL OF ASHES: Ashes should be placed in a metal container with a tight fitting lid. The closed container of ashes should be placed on a non-combustible floor or on ground, well away from all combustible materials pending final disposal. If ashes are disposed of by burial in soil or otherwise locally dispersed, they should be retained in closed container until all cinders have thoroughly cooled.

CREOSOTE-FORMATION AND NEED FOR REMOVAL: When wood is burned slowly, it produces tar and other organic vapors, which combine with expelled moisture to form creosote. The creosote vapors condense in relatively cool chimney flue of a slow-burning fire. As a result, creosote residue accumulates on flue lining. When ignited this creosote makes an extremely hot fire

SECTION VII OPERATION

This section of manual is to help you get maximum efficiency and maximum smoke (particulate) reduction from your heater. If you should experience any difficulty or have any questions concerning your heater, contact your dealer for assistance.

NOTE: The manufacturer recommends that for maximum performance burn natural seasoned hard wood.

NOTE: Soft woods such as pine, create more creosote, clogging of chimney and produce a less efficient burn performance.

Build a fire for maximum efficiency. This model burns wood and extracts heat so efficiently, a large fire is not necessary. A large fire not only wastes energy, it usually results in home being too warm for comfort.

The following steps will serve as a guide for operating your stove.

BUILDING A FIRE

1. Open door.
2. Open primary air control under hearth, push in. To close pull all the way out.
3. Twist two pieces of non-colored newspaper into a roll and place them on floor of firebox.

NOTE: "Do not use grate or elevate fire. Build wood fire directly on inner bottom of fire box."

4. This model is not designed for use of grates, andirons or other methods of supporting fuel.
5. Lay several pieces of dry kindling on top of newspaper.
6. Place three or four small pieces of firewood, 2"-3" in diameter, on top of kindling.
7. Light newspaper in front. Close and latch door. Don't leave fire unattended at this point. The draft system of heater should start quickly. It may be necessary to preheat chimney to get draft started. To do this, open door and add newspaper to top rear of wood. Light or let this paper ignite and allow to burn while holding door slightly cracked. Once draft has started, close and lock door. You are over- heating unit if the chimney and or connector glows red.
8. **NOTE: After embers and a coal bed have been established, load heater with seasoned natural hard wood, placing it length way front to rear.**

NOTE: THE FUELING DOOR MUST REMAIN CLOSED DURING OPERATION.

BURN RATE	LOW	MED-LOW	MED-HI	HI
AIR SETTINGS	5/16"	3/8"	5/8"	WIDE OPEN

NOTE: If the optional blower is being used on the Model 74. Your stove is equipped with a automatic thermostat. When stove gets hot enough, thermostat will activate room air blower. Set fan speed according to desired heat output.

NOTE: When refueling or removing ashes turn "OFF" room air blower. Be sure to turn room air blower back on when finished.

NOTE: Do not run power cord underneath heater or in walk way or heavy traffic areas.

SECTION VIII
TROUBLESHOOTING

PROBLEM	POSSIBLE CAUSE	SOLUTION
Sluggish Heater	Obstruction in chimney	Check for and remove obstruction
	Improperly sealed trim kit or direct connect kit	(a) Check trim kit gasketing seal to fireplace and gasket as necessary to seal unit. Gasket under front bottom of stove if needed. (b) Check seal if using direct connect and correct.
	Manual damper in chimney is closed	Open manual damper and wire shut with stainless steel wire or remove damper
	Wet or unseasoned wood being burned	Burn dry, natural seasoned hard wood
	Poor chimney draft	Improper chimney height or wrong size flue is being used. Cooler temperatures caused by external chimney
	Improper wood loading	Load wood length way from front to rear

TROUBLESHOOTING
(Continued)

PROBLEM	POSSIBLE CAUSE	SOLUTION
High fuel consumption	Improper regulation of draft or inlet air	(a) Close inlet air control as much as possible to maintain desired heat output (b) Check gaskets, reinstall fiberglass gasketing round doors and glass as necessary
	Improper door fitting	Check door gasket, check adjustment of door latch
Backpuffing	Gusts of Wind	(a) Smoke shelf in chimney is filled with creosote & ash (b) Chimney may need wind diverter. Raise chimney for better draft
Smoke rollout when heater door is opened	Wind gusts blowing down the chimney	(a) Smoke shelf in chimney is filled with creosote & ash (b) Chimney may need wind diverter. Raise chimney for better draft
	Opening heater door too fast	Open air control. Crack door for 15 seconds before fully opening door

NEW BUCK CORPORATION (NBC)
"LIMITED WARRANTY" FOR THE BUCK STOVE
PLEASE READ THIS WARRANTY CAREFULLY

PRODUCTS COVERED

This warranty covers the new Buck Stove heating unit, so long as it is owned by the original purchaser, including optional and standard accessories purchased at the same time, subject to terms, limitations, and conditions herein set out.

PRODUCTS NOT COVERED

This warranty does not cover the following:
Glass, Refractory material or firebrick, Gaskets.

This Warranty will not cover any damage and/or failure caused by abuse or improper installation of the products covered.

WARRANTY TIME PERIODS

(A) **Period I**

For one (1) year from the date of purchase, NBC will replace or repair, at its option, any part defective in materials or workmanship. The costs of parts only are included. The customer pays any labor or transportation charges required.

Thereafter,

(B) **Period II**

For the period after the first year from the date of purchase and extending for five (5) years as long as the Buck Stove is owned by the original purchaser, NBC will repair or replace, at its option, any part defective in materials or workmanship, with the exception of: electrical motors, wiring, switches, and components: optional and standard accessories; and all parts not permanently attached to the heating unit. Parts not permanently attached to the heating unit are defined as those items designed to be removed from the stove, including those removable with common hand tools. The costs of parts only are included. The customer pays any labor or transportation charges required.

.

PROCEDURE

Should you feel that your BUCK STOVE is defective, you should contact any Buck Stove dealer for the name of your nearest authorized Buck Stove service representative, who will instruct you on the proper procedure, depending on which Warranty Time Period (Period I or Period II) applies.

If for any reason you are dissatisfied with the suggested procedures, you may contact us in writing at:

New Buck Corporation
Customer Service Department
P. O. Box 69
Spruce Pine, NC 28777

CONDITIONS AND EXCLUSIONS

(A) Replacement of parts may be in the form of new or fully reconditioned parts, at NBC's option.

(B) There is no other express warranty. All implied warranties of merchantability and fitness for use are limited to the duration of the Express Warranty.

(C) New Buck Corporation is not liable for indirect, incidental, or consequential damages in connection with the use of the product including any cost or expense of providing substitute equipment or service during periods of malfunction or non-use. Some states do not allow the exclusion of incidental or consequential damages, so the above exclusion may not apply to you.

(D) All warranty repairs under this warranty must be performed by an authorized Buck Stove service representative. Repairs or attempted repairs by anyone other than an authorized service representative are not covered under this warranty. In addition, these unauthorized repairs may result in additional malfunctions, the correction of which is not covered by warranty.

OTHER RIGHTS

This warranty gives you specific legal rights, and you may also have other rights, which vary from state to state.

OWNER REGISTRATION CARD

The attached Owner Registration Card must be completed in its entirety and mailed within 30 days from the date of purchase or from the date of installation, if installed by a factory certified installer, to New Buck Corporation in order for warranty coverage to begin.

PLEASE NOTE: The Owner Registration Card must contain the Authorized Buck Stove Dealer Code Number and the Certified Installer's number (if applicable) for warranty coverage to begin.

To be completed by selling distributor or dealer for customer:

Name_____
(Last) (First)

Address _____

City _____State _____ Zip _____

*CUSTOMER EMAIL::*_____

MODEL 74 - Serial Number _____

Date of Installation: Day _____ Month _____Year _____

Installer's Name _____

Installer's Certification Number _____

Dealer's Name _____

City _____State _____ Zip _____